Aerospace Engineering (2023 - 2024)

Name **Student ID**

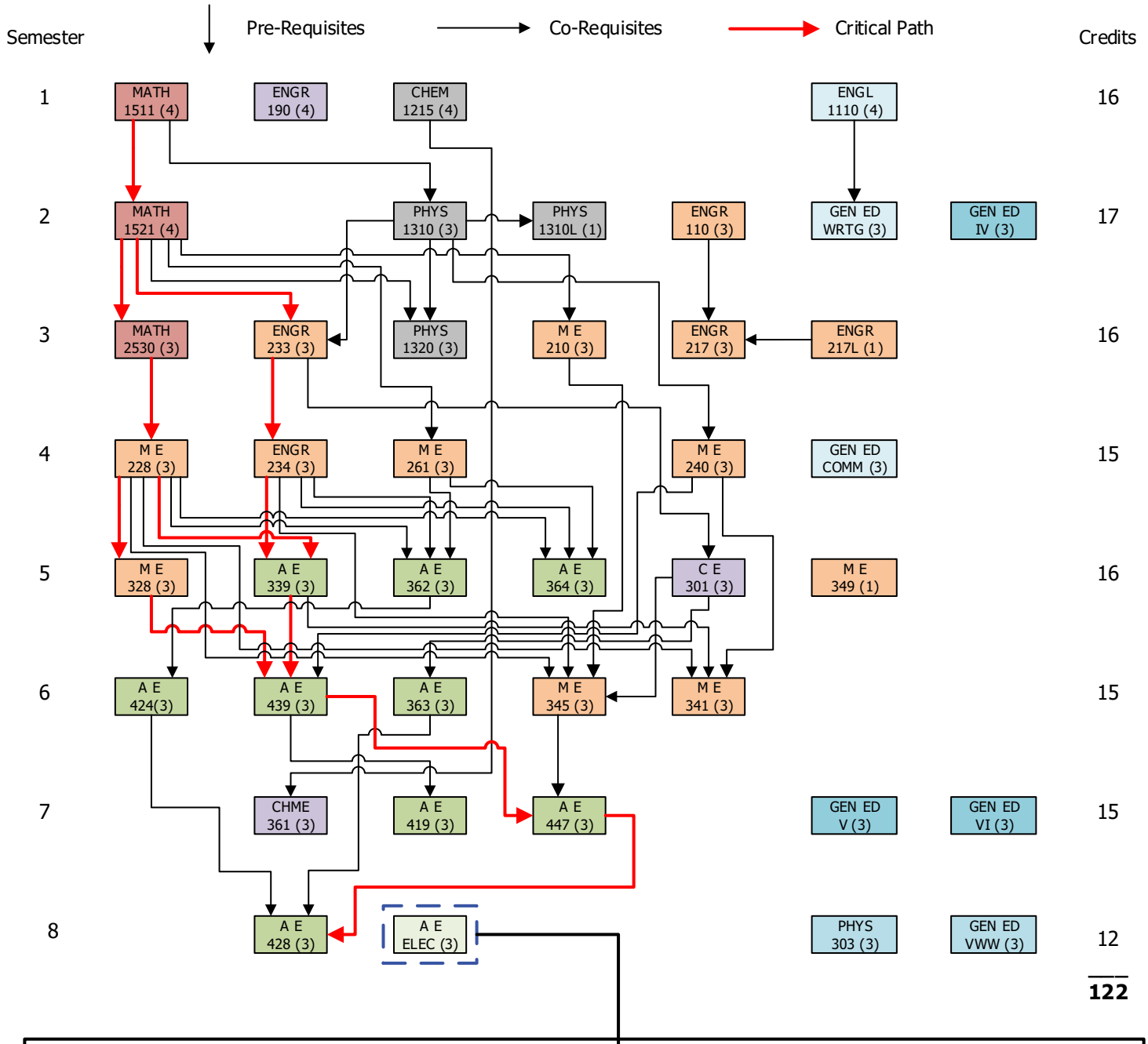

Electives:

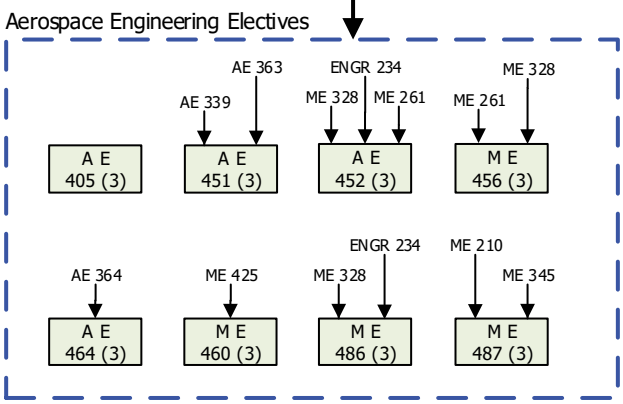

This Flow Chart is an advising aid. It attempts to present in graphical form, the material contained in the printed version of the NMSU Undergraduate Catalog. Information in this Flow Chart is NOT meant to replace that information in the Undergraduate Catalog. The NMSU Undergraduate Catalog is the final authority if any discrepancies exisit between the information here and that catalog. For a complete list of available elective courses, please refer to the online MAE Course Information and Syllabus webpage.