Mechanical Engineering (2018-2019)

Name

Student ID

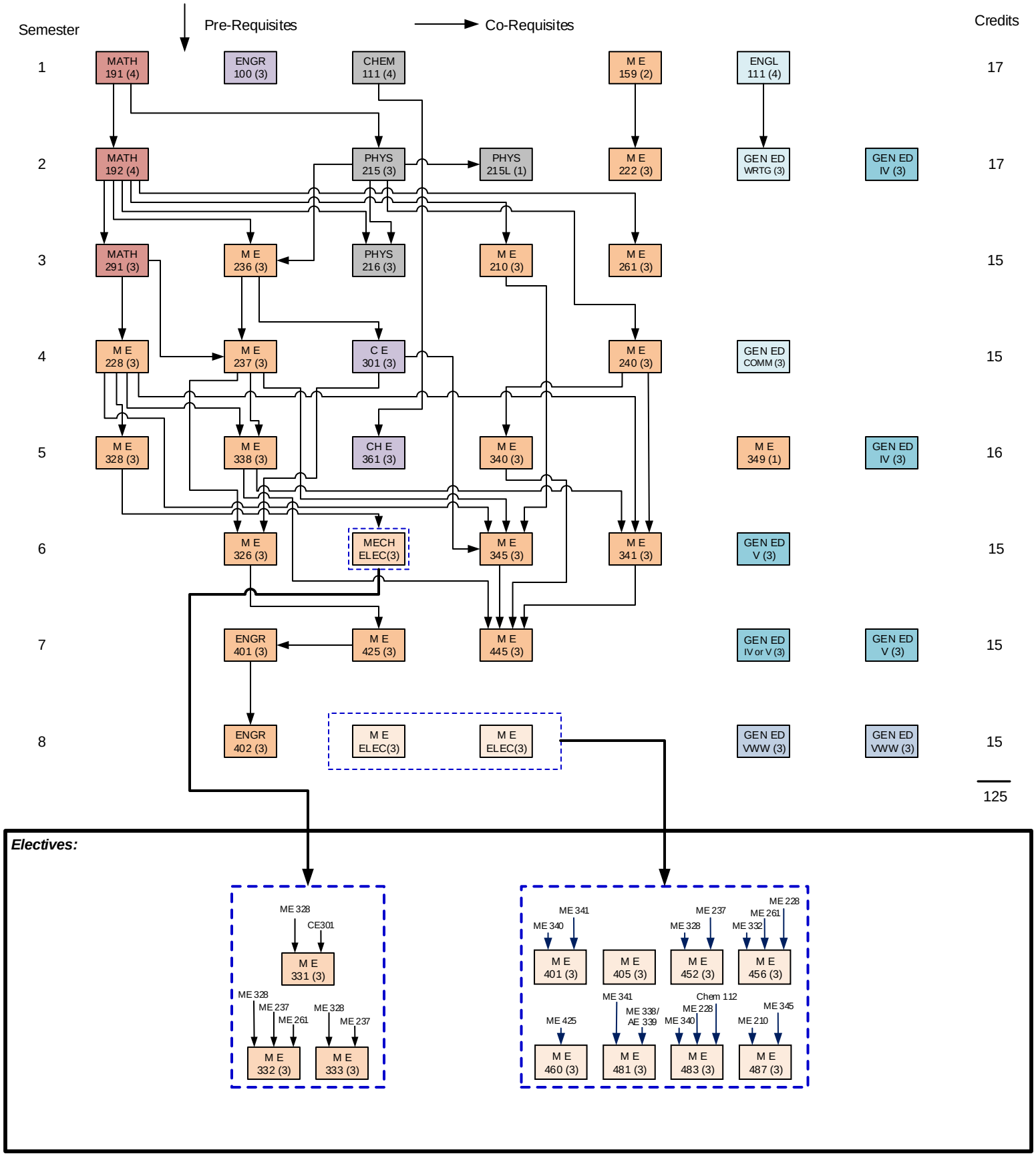

This Flow Chart is an advising aid. It attempts to present in a graphical form, the material contained in the printed version of the NMSU Undergraduate Catalog. Information in this Flow Chart is NOT meant to replace that information in the Undergraduate Catalog. The NMSU Undergraduate Catalog is the final authority if any discrepancies exist between the information presented here and that catalog.